GENESIS OF THE JAGUAR V12

This is a barbed question ! Don't forget, we used light alloys very extensively indeed in some of our later versions of the competition XK engine and we used them quite extensively in the production models – cylinder head, sump, front timing cover and inlet manifold. These are also in light alloy in the V12. The big addition to the list is, of course, the cylinder block. The main reason for the use of light alloy is weight saving and in the block alone we saved 116 lbs. compared with the same unit in cast iron, even though the alloy block was designed to withstand the stresses of far higher power outputs than we are ever likely to need.

We were worried about the potentially high noise level compared with a cast iron block engine and, in fact, we did produce an engine with a block in this material. What surprised us was that when installed in a car, there was no detectable difference in noise level between the alloy block engine and the cast iron unit ! However, we were concerned about the possibilities of crank rumble and, because of this, we have used cast iron bearing caps and four bolts per main bearing to give the maximum rigidity. In addition, we use separate cylinder liners which provide ample water passages between each bore. We have spent a lot of time on getting the cooling as near perfect as possible, for even cooling throughout the engine is particularly important in a high performance unit particularly at cylinder heads and bores.

---

8. One cannot help but notice the very long inlet pipes. How critical are these to the output of the engine ?

Frankly, not very. The location of the carburetter was governed largely by the under-bonnet space available to us. We wanted long induction pipes to get a ram effect for the ingoing mixture, so as to boost the middle range torque, and this factor together with carburetter location decided the actual length. Ideally, the inlet manifold system ought to be in the middle of the 'V' but space considerations plus the fact that there just isn't a satisfactory British Downdraught carburetter decided the final layout.

---

9. Transistorised ignition is normally associated with racing engines. It is obviously complex and sophisticated but what are the advantages for the owner ?

Without doubt the most important point is that this system requires no maintenance at all. There are no contact points – therefore no adjustments are needed – the firing impulse is provided by means of magnetic impulses in the distributor head. In addition, Lucas have turned the whole system into a real production line job and we have found it to be very reliable indeed. Should anything go wrong, then the main components are completely integrated units which are easily and quickly changed.

---

10. You mentioned reliability just now in connection with the ignition system. Isn't a V12 likely to be less reliable than, say, a six or V8 ? After all, there are more parts to go wrong !

Sir Henry Royce of Rolls-Royce when challenged on this point in connection with the V12 Merlin aero-engine said that as long as the components were right, the number was irrelevant ! That engine certainly proved the correctness of his statement. There are, of course, other factors. Firstly, the more cylinders there are for a given capacity and output the lower the stresses imposed on the individual parts. Secondly, stresses are closely related to power output per litre and in the V12 this figure is quite modest. The Jaguar engine was designed to produce very substantially more power than its present rating so it's working quite leisurely even at maximum power ! Thirdly, we have done a lot of development testing as a result of which we have built up a considerable amount of experience which we have been able to incorporate into the production engine. Finally, we have spent a very considerable amount of money in purchasing the very latest machine tool equipment to make the engine. We are using the most modern production techniques to ensure that these engines reach the highest possible standards in terms of performance, reliability and durability.

RESEARCH & DESIGN

RECHERCHES ET CONSTRUCTION
FORSCHUNG UND ENTWURT
RICERCA E DISEGNARE

SPECIFICATION

SPECIFICATIONS
SPEZIFIKATION
CARATTERISTICHE

TECHNICAL SPECIFICATION

Jaguar 5.3 Litre Vee 12 Power Unit

GENERAL

Four stroke petrol engine—water cooled.

Number of cylinders	12	
Configuration	60° Vee	
Bore	90 mm.	3.54 in.
Stroke	70 mm.	2.76 in.
Capacity	5343 c.c.	326 cu. in.
Piston c.s.a.	763.2 sq. cms.	118 sq. ins.
Compression ratio	9.0 :1	

Air Injection System—

Supplementary equipment for compliance with maximum regulations for pollution control.

Air Filter/Silencer, Air pump, Non return valve, Air distribution pipes to exhaust ports. Air-Gulp valve for supplying air from air cleaner to inlet manifold via balance pipe.

Cylinder Heads—Two Flat face aluminium alloy

Tappet Block —Two Aluminium alloy

Camshafts —Two Cast iron with chilled cams

Valves

Layout—Single Overhead Camshafts driven by single duplex chain.

Chain tensioners—Three damper pads one long morse tensioner

Valve Material Inlet

EN 52 Steel

Valve Material Exhaust

21-4NS Steel

Valve Head Diameter Inlet

41.28 mm. 1.625 in.

Valve Head Diameter Exhaust

34.55 mm. 1.360 in.

Valve Lift

9.525 mm. 0.375 in.

Valve Timing Inlet

17° B.T.D.C. 59° A.B.D.C.

Valve Timing Exhaust

59° B.B.D.C. 17° A.T.D.C.

Cylinder Block—Open deck. Aluminium Alloy LM 25

Liners—Cast iron 4K6 "wet" Type

Pistons—W-skirt Aluminium Alloy LM 13WP with the combustion chamber in crown

Piston rings—Chrome top, Taper Faced 2nd, and oil control 3rd

Crankshaft—Three Plane Seven Bearing Forged in Tufftrided EN 16T steel with unbonded damper

Connecting Rods—Forged Steel EN 16T

Sump—Aluminium Alloy LM 24 with steel baffles

Oil Cooler—Aluminium casting replacing forward portion of sump

Oil pump—Crescent type, Inner and outer gears, Inner gear concentric around crankshaft nose

Oil Filter—Tecalemit Full Flow

Ignition—Lucas Opus Fully Transistorised magnetic impulse. Lucas distributor, and Lucas opus coil

Sparking Plugs—Champion N9Y

Firing Order—'A' bank is on the right from driver's seat

—1A—6B—5A—2B—3A—4B—6A—1B—2A—5B—4A—3B

Carburettors—Four Zenith 175 CD SE, with manual choke

Induction—Two paper element air filters feeding into plenum chamber with integral water rail and four 3-branch induction pipes—all aluminium alloy.

Fuel—Recirculatory system with S.U. electric pump

Fuel Specification—4 star minimum octane 97 R.M.

Dimensions (with all ancillaries)

Length	110.8 cm.	43.5 in.
Width	101.0 cm.	39.75 in.
Height	70.0 cm.	27.5 in.
Weight	308.45 kg.	680 lbs.

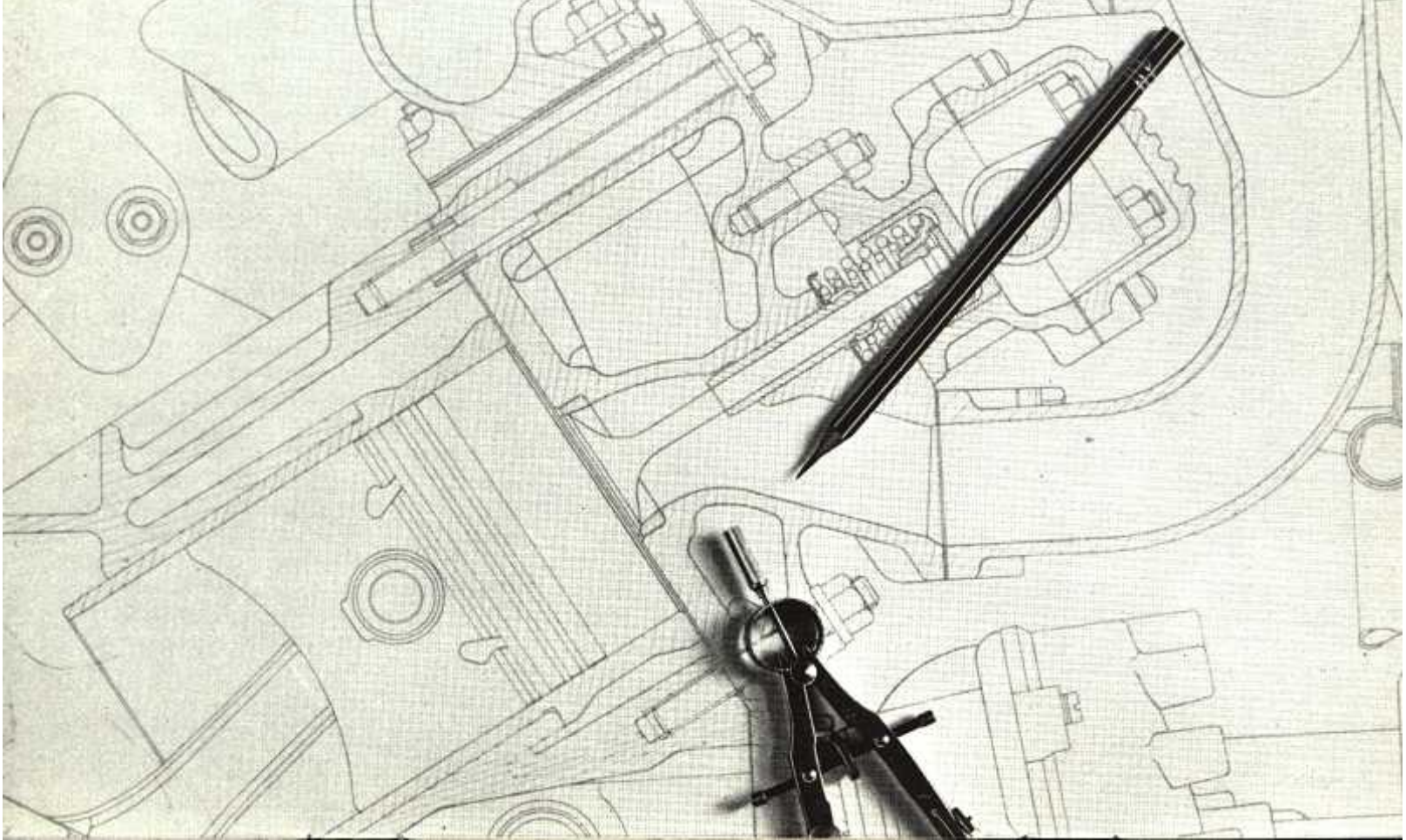

V12 ENGINE—PRODUCTION

The volume production of Jaguar's new V12 engine follows a carefully-planned tooling-up programme representing a total expenditure approaching £3,000,000.

Located in the Jaguar-Daimler plant at Radford, Coventry, the manufacturing plant for the main V12 components and the V12 engine assembly line are entirely separate from the existing 6-cylinder (XK) engine production lines.

In creating the new facilities, Jaguar's technicians have placed considerable emphasis upon the long-term nature of the project. The installation is geared to produce a future optimum of 1,000 major power unit components per 80-hour (two shift) week, and it is possible to utilise the equipment to produce alternative capacities and configurations although it is stressed that there are no plans to introduce such variations in the immediate future. The legendary XK six-cylinder engine in 2.8 and 4.2 litre form will continue as Jaguar's

An aluminium components section, which occupies most of the remainder of the new machine shop, is utilised for the machining of such items as the tapper blocks, the timing-cover, the manifolds, the sump, the water pump body, and the camshaft covers.

The crankshaft is an EN 16T steel forging and, after a complex series of operations, the finished main and big end bearing surfaces are measured to 0.0003 inch (0.076 mm.) limits, whilst all imbalance is corrected to a high degree of accuracy. Apart from the crankshafts and main bearing caps (which are produced alongside the block line, to which they are fed) the Jaguar-machined non-aluminium engine components—such as connecting rods and camshafts—are fed into the system from another specially equipped machine shop nearby.

Engine assembly is carried out on an electrically-driven 52-stage track which has been designed throughout for ease of working and handling and which is situated adjacent to

RESULT

RESULTA
ERGEBNIS
RISULTA

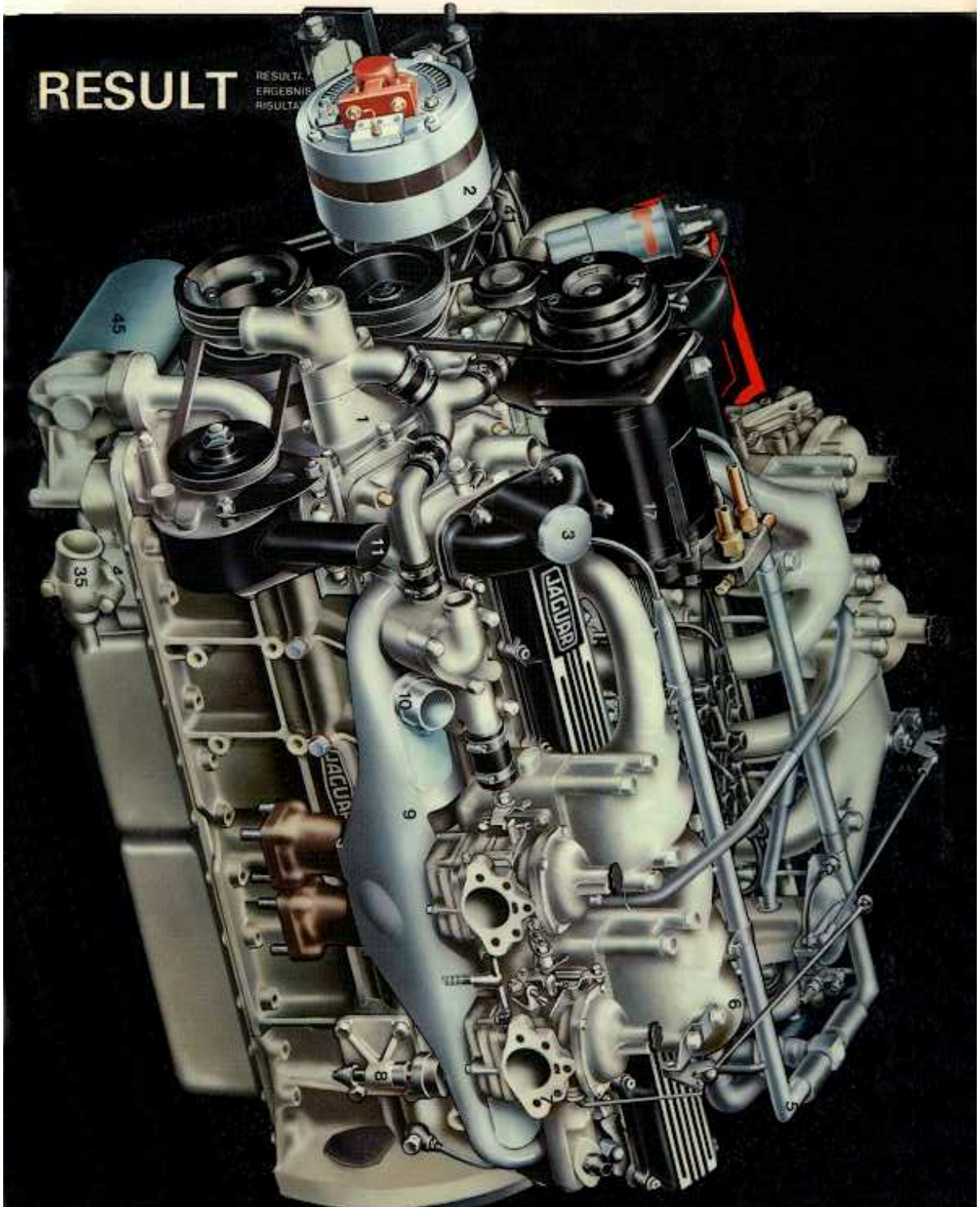

RESULT

RESULTA
ERGEBNIS
RISULTATI

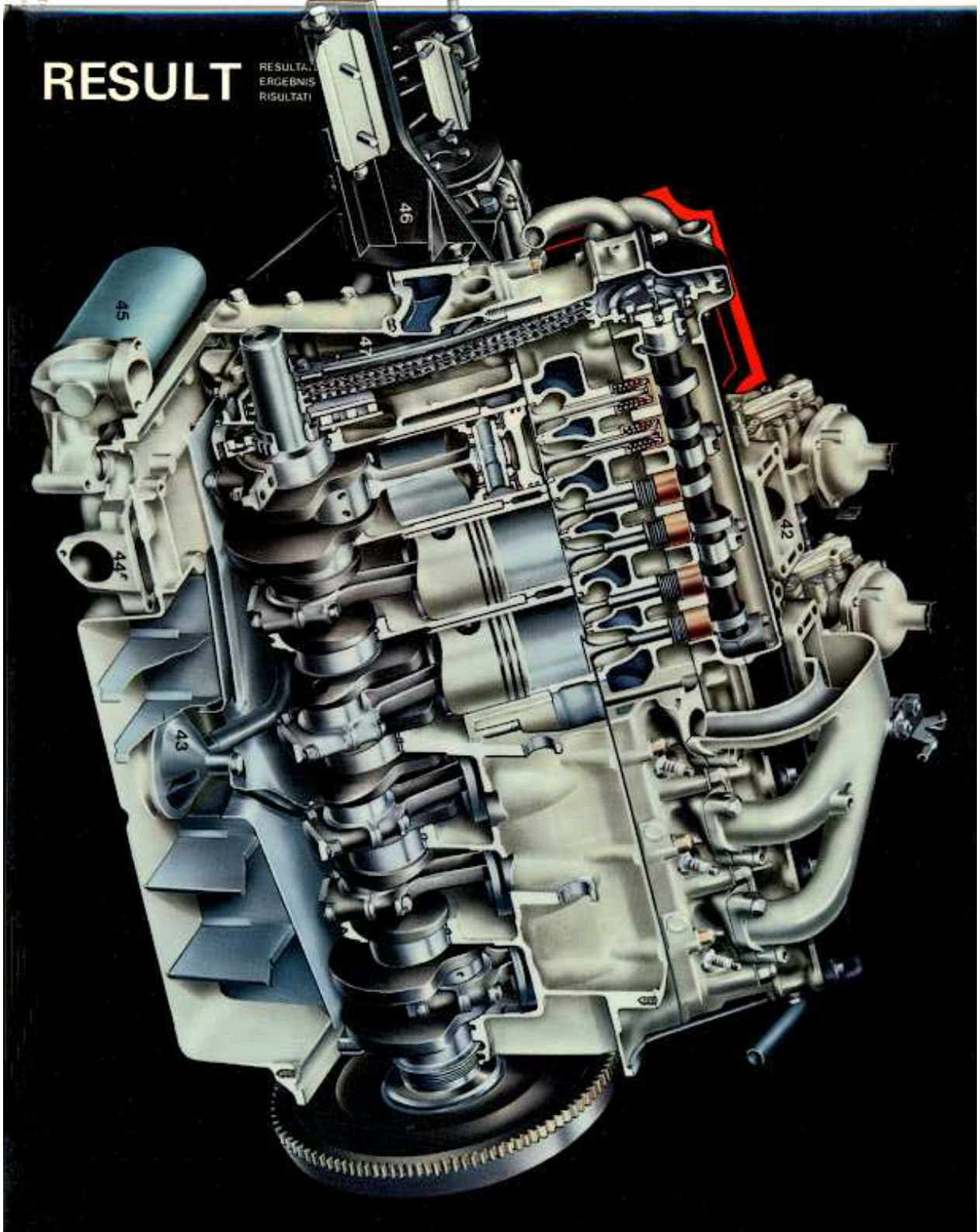

RESULT

RESULTA...
ERGEBNIS
RISULTATI

RESULT

RESULTA
ERGEBNIS
RISULTATI

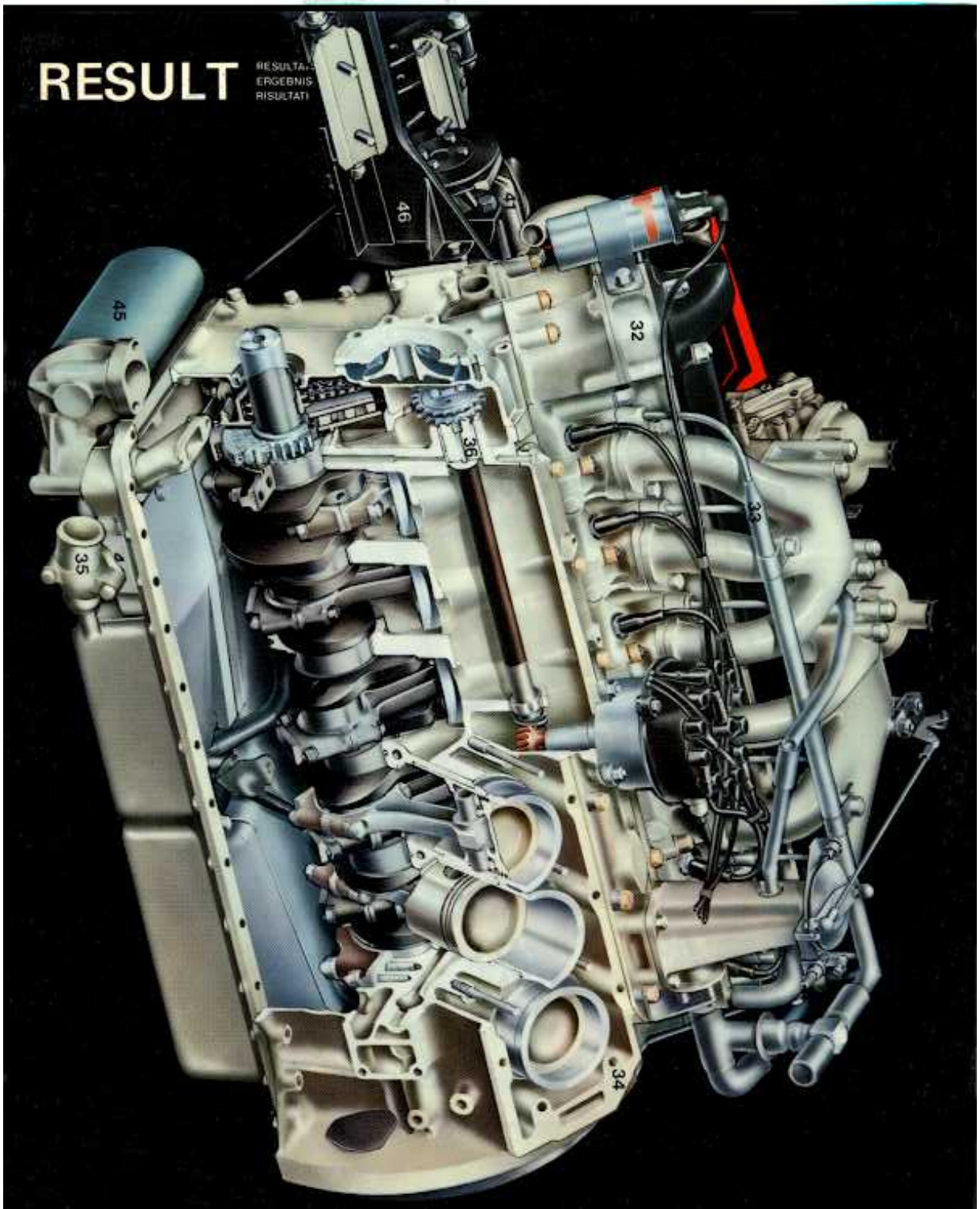

ENGLISH

PAGE 1
1 Water Pump Body
2 Alternator
3 Oil Filler Cap
4 Throttle Linkage
5 Air Feed Pipe (Exhaust Emission)
6 Inlet Manifold
7 Zenith Carburettor
8 Oil Transmitter Mounting Plate
9 Heat Shield
10 Hot Air Feed to Air Cleaner
11 Power Steering Pump

PAGE 2
12 Cylinder Head
13 Head Gasket
14 Water Pump Impeller
15 Exhaust Manifold

PAGE 3
16 Duplex Chain
17 Air Conditioning Compressor
18 Ignition-Amplifier
19 Combustion Chamber Bowl in Piston
20 Single Overhead Camshaft per Bank
21 Inverted Bucket Tappet
22 Exhaust Valve
23 Inlet Valve
24 Oil Gallery Plugs
25 Combined 'Vee' Belt Drive and Crankshaft Damper
26 Oil Pump Cover

PAGE 4
27 Wet Cylinder Liner
28 Camshaft Oil Feed
29 Oil Pump
30 Timing Chain Sprocket
31 Dipstick Tube Extension

PAGE 5
32 Tappet Block
33 Air Injection Pipes (Exhaust Emission)
34 Open Deck Cylinder Block
35 Oil Cooler Outlet
36 Auxiliary Shaft

PAGE 6
37 Rear Oil Seal Groove
38 Throttle Linkage Pedestal
39 Distributor
40 Valve Springs

PAGE 7
41 Air Pump (Exhaust Emission)
42 Induction Housing
43 Oil Pick-Up Incorporating Strainer Gauze
44 Engine Oil Cooler
45 Oil Filter
46 Accessory Mounting Bracket
47 Timing Chain Tensioner

PAGE 8
48 Air Pump Relief Valve Muffler
49 Oil Pressure Release Valve
50 Starter Motor

FRANCAIS

PAGE 1
1 Corps de pompe à eau
2 Alternateur
3 Bouchon de remplissage d'huile
4 Timonerie de commande des gaz.
5 Tuyau d'alimentation en air (épuration des gaz d'échappement)
6 Collecteur d'admission
7 Carburateur Zenith
8 Plaque de montage du transmetteur de pression d'huile
9 Plaque de protection thermique
10 Alimentation en air chaud du filtre à air
11 Pompe de direction assistée

PAGE 2
12 Culasse
13 Joint de culasse
14 Turbine de pompe à eau
15 Collecteur d'échappement

PAGE 3
16 Chaine Duplex
17 Compresseur du système de climatisation
18 Amplificateur d'allumage
19 Volume de combustion contenu dans la tête de piston
20 Arbre à cames en tête unique pour chaque rangée de cylindre
21 Poussoir creux
22 Soupape d'échappement
23 Soupape d'admission
24 Bouchons des passages principaux de graissage
25 Transmission combinée à courroies trapezoidales amortisseur vilbrequin
26 Couvercle pompe à l'huile

PAGE 4
27 Chemise de cylindre humide
28 Trou de graissage de l'arbre à cames
29 Pompe à huile
30 Pignon de chaine de distribution
31 Prolongement du tube de la réglette-jauge

PAGE 5
32 Bloc-poussoirs
33 Tuyaux d'injection d'air (épuration des gaz d'échappement)
34 Bloc-cylindres à partie supérieure plate
35 Sortie du refroidisseur d'huile
36 Arbre auxiliaire

PAGE 6
37 Gorge du joint d'étanchéité d'huile arrière
38 Support de la timonerie de commande des gaz
39 Distributeur
40 Ressorts de soupape

PAGE 7
41 Pompe à air (épuration des gaz d'échappement)
42 Chambre d'admission d'air
43 Tuyau d'aspiration d'huile muni d'un tamis
44 Refroidisseur d'huile du moteur
45 Filtre à huile
46 Support de fixation d'accessoires
47 Tendeur de la chaine de distribution

PAGE 8
48 Silencieux du clapet de décharge de la pompe à air
49 Soupape décompression huile
50 Moteur de démarrage

DEUTSCH

PAGE 1
1 Wasserpumpe
2 Alternator
3 Öleinfüllstutzenverschluss
4 Drosselgestänge
5 Luftleitung (Abgasentgiftung)
6 Einlasskrümmer
7 "Zenith" – Vergaser
8 Stützplatte für Öldruckgeber
9 Hitzeschutz
10 Heissluftzufuhr zum Luftfilter
11 Pumpe für Servolenkung

PAGE 2
12 Zylinderkopf
13 Zylinderkopfdichtung
14 Wasserpumpenflügelrad
15 Auspuffkrümmer

PAGE 3
16 Duplex-Kette
17 Verdichter für Klimaanlage
18 Zündverstärker
19 Brennkammer im Kolben
20 Eine obenliegende Nockenwelle pro Zylinderreihe
21 Hohlstössel
22 Auspuffventil
23 Einlassventil
24 Hauptölkanalstopfen
25 Kombinierter Keilriementrieb Kurbelwellendämpfer
26 Ölpumpendeckel

PAGE 4
27 Nasse Zylinderlaufbuchse
28 Ölzufuhr zur Nockenwelle
29 Ölpumpe
30 Steuerkettenrad
31 Verlängerung für Ölmesstabrohr

PAGE 5
32 Stösselblock
33 Rohrleitung für Lufteinspritzung (Abgasentgiftung)
34 Kurbelgehäuse mit Flachkopf
35 Ölkühlerauslass
36 Hilfswelle

PAGE 6
37 Hintere Simmerringnut
38 Stütz für Drosselgestänge
39 Verteiler
40 Ventilfedern

PAGE 7
41 Luftpumpe (Abgasentgiftung)
42 Saugkammer
43 Ölsaugleitung mit Filtersieb
44 Motorölkühler
45 Ölfilter
46 Stütze für Hilfsgeräte
47 Steuerkettenspanneinrichtung

PAGE 8
48 Dämpfer am Luftpumpen-Druckreduzierventil
49 Öldruckauslöseventil
50 Antriebsmaschine

ITALIANO

PAGINA 1
1 Corpo Pompa Acqua
2 Alternatore
3 Tappo Rifornimento Olio
4 Articolazione Acceleratore
5 Tubazione Alimentazione Aria (Emissione scappamento)
6 Collettore di Aspirazione
7 Carburatore Zenith
8 Piastra Sostegno Trasmettitore Pressione d'Olio
9 Schermo Termico
10 Alimentazione Aria Calda al Filtro Aria
11 Pompa Servosterzo

PAGINA 2
12 Testata Cilindro
13 Guarnizione della Testata
14 Girante Pompa Acqua
15 Collettore Scarico

PAGINA 3
16 Catena Duplex
17 Compressore per Climatizzatore
18 Amplificatore Accensione
19 Cavità Camera Combustione ricavata nel Pistone
20 Albero Camme Semplice in Testa per Ciascuna Linea
21 Punteria a Impronta Invertita
22 Valvola di Scarico
23 Valvola di Aspirazione
24 Tappi Condotti Olio
25 Accoppiamento cinghia di trasmissione ammortizzatore albero a gomito
26 Coperchio pompa dell'olio

PAGINA 4
27 Camicia Umida per Cilindro
28 Alimentazione Olio Albero Camme
29 Pompa Olio
30 Ingranaggio Catena Comando Distribuzione
31 Prolunga Tubolare Astina Livello

PAGINA 5
32 Blocco Punteria
33 Tubazione Iniezione Aria (Emissione scappamento)
34 Monoblocco a Testa Piatta
35 Uscita Radiatore Olio
36 Albero Ausiliario

PAGINA 6
37 Scanalatura Posteriore Paraolio
38 Sostegno Articolazione Acceleratore
39 Distributore
40 Molle per Valvola

PAGINA 7
41 Pompa Aria (Emissione scappamento)
42 Camera Aspirazione
43 Prelevatore Olio con Reticella Filtrante
44 Radiatore Olio Motore
45 Filtro Olio
46 Staffa Sostegno Accessori
47 Tenditore per Catena Comando Distribuzione

PAGINA 8
48 Silenziatore Valvola di Sicurezza Pompa Aria
49 Valvola di decompressione dell'olio
50 Motore d'avviamento

RESULT

RESULTATS
ERGEBNIS
RISULTATI

O.K. FOR RELEASE

A high degree of automation has been introduced in the machine shop and, indeed, many of the operations—apart from close-tolerance precision finishing—are carried out on automatic transfer machines. Extensive use of light alloys has placed particular emphasis on care of handling, to preserve machined faces, and on pressure-testing. Plant installation for the most complex single aluminium component—the cylinder block—has accounted for some £850,000 of the expenditure, the major item of equipment being three Archdale transfer machines with a total of 57 stations. Equipment for machining the aluminium cylinder heads cost nearly £700,000 installed, and this includes a 42-station Huller transfer machine. Blocks and heads are machined, on adjoining production lines, from sand castings received from British Leyland and other foundries, which provide guaranteed tooling holes and facings to locate them during the early machining stages.

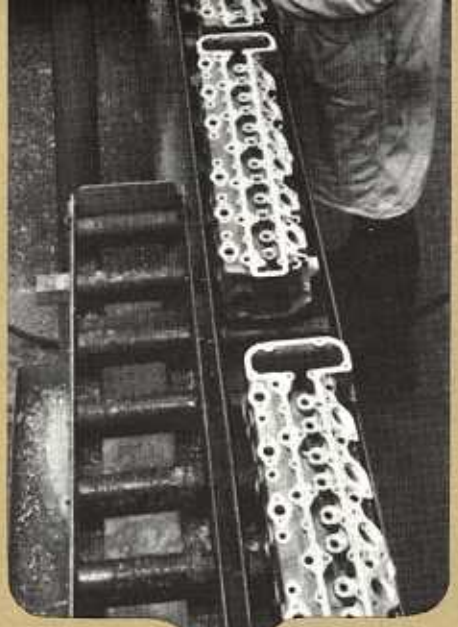

attached to pedestal-mounted fixtures which can be adjusted to the best working angle for any given assembly operation. Grouped around the assembly track is a series of sub-assembly sections, the main one being for the build-up of the cylinder head/tappet block unit, including careful checks on tappet clearances. On another sub-section, the crankshaft/clutch/flywheel assembly is correctly balanced as a complete unit. The attention to detail in all stages of its machining and assembly is one of the outstanding characteristics of Jaguar V12 engine manufacture.

As has always been the practice with Jaguar engines, each new V12 unit is subjected to "bench" testing before it is transported to the Jaguar assembly plant at Browns Lane, Allesley (some three miles from the Radford factory).

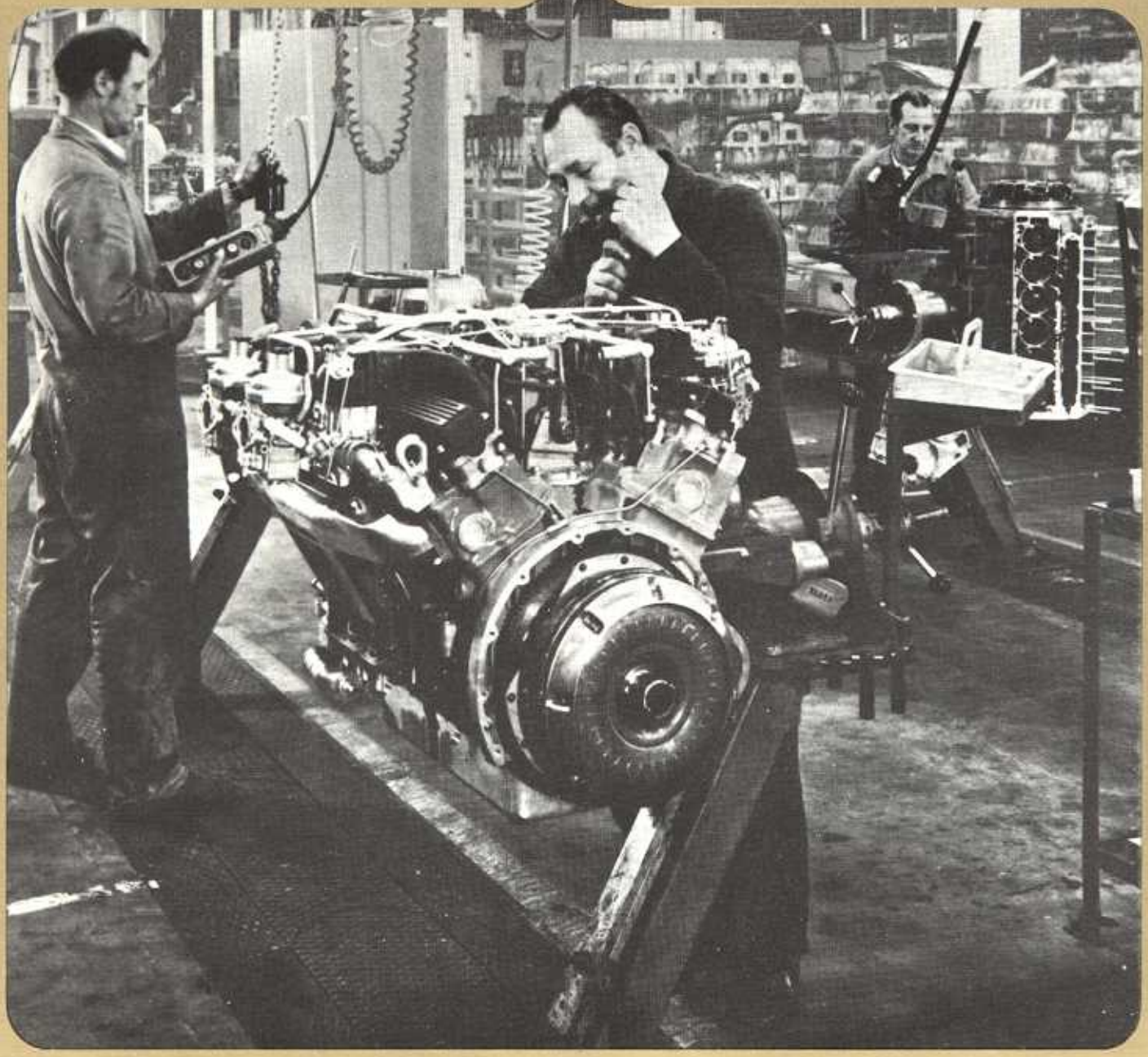

ENGLISH

PAGE 1
1 Water Pump Body
2 Alternator
3 Oil Filler Cap
4 Throttle Linkage
5 Air Feed Pipe (Exhaust Emission)
6 Inlet Manifold
7 Zenith Carburettor
8 Oil Transmitter Mounting Plate
9 Heat Shield
10 Hot Air Feed to Air Cleaner
11 Power Steering Pump

PAGE 2
12 Cylinder Head
13 Head Gasket
14 Water Pump Impeller
15 Exhaust Manifold

PAGE 3
16 Duplex Chain
17 Air Conditioning Compressor
18 Ignition-Amplifier
19 Combustion Chamber Bowl in Piston
20 Single Overhead Camshaft per Bank
21 Inverted Bucket Tappet
22 Exhaust Valve
23 Inlet Valve
24 Oil Gallery Plugs
25 Combined 'Vee' Belt Drive and Crankshaft Damper
26 Oil Pump Cover

PAGE 4
27 Wet Cylinder Liner
28 Camshaft Oil Feed
29 Oil Pump
30 Timing Chain Sprocket
31 Dipstick Tube Extension

PAGE 5
32 Tappet Block
33 Air Injection Pipes (Exhaust Emission)
34 Open Deck Cylinder Block
35 Oil Cooler Outlet
36 Auxiliary Shaft

PAGE 6
37 Rear Oil Seal Groove
38 Throttle Linkage Pedestal
39 Distributor
40 Valve Springs

PAGE 7
41 Air Pump (Exhaust Emission)
42 Induction Housing
43 Oil Pick-Up Incorporating Strainer Gauze
44 Engine Oil Cooler
45 Oil Filter
46 Accessory Mounting Bracket
47 Timing Chain Tensioner

PAGE 8
48 Air Pump Relief Valve Muffler
49 Oil Pressure Release Valve
50 Starter Motor

FRANCAIS

PAGE 1
1 Corps de pompe à eau
2 Alternateur
3 Bouchon de remplissage d'huile
4 Timonerie de commande des gaz.
5 Tuyau d'alimentation en air (épuration des gaz d'échappement)
6 Collecteur d'admission
7 Carburateur Zenith
8 Plaque de montage du transmetteur de pression d'huile
9 Plaque de protection thermique
10 Alimentation en air chaud du filtre à air
11 Pompe de direction assistée

PAGE 2
12 Culasse
13 Joint de culasse
14 Turbine de pompe à eau
15 Collecteur d'échappement

PAGE 3
16 Chaine Duplex
17 Compresseur du système de climatisation
18 Amplificateur d'allumage
19 Volume de combustion contenu dans la tête de piston
20 Arbre à cames en tête unique pour chaque rangée de cylindre
21 Poussoir creux
22 Soupape d'échappement
23 Soupape d'admission
24 Bouchons des passages principaux de graissage
25 Transmission combinée à courroies trapezoidales amortisseur vilbrequin
26 Couvercle pompe à l'huile

PAGE 4
27 Chemise de cylindre humide
28 Trou de graissage de l'arbre à cames
29 Pompe à huile
30 Pignon de chaine de distribution
31 Prolongement du tube de la réglette-jauge

PAGE 5
32 Bloc-poussoirs
33 Tuyaux d'injection d'air (épuration des gaz d'échappement)
34 Bloc-cylindres à partie supérieure plate
35 Sortie du refroidisseur d'huile
36 Arbre auxiliaire

PAGE 6
37 Gorge du joint d'étanchéité d'huile arrière
38 Support de la timonerie de commande des gaz
39 Distributeur
40 Ressorts de soupape

PAGE 7
41 Pompe à air (épuration des gaz d'échappement)
42 Chambre d'admission d'air
43 Tuyau d'aspiration d'huile muni d'un tamis
44 Refroidisseur d'huile du moteur
45 Filtre à huile
46 Support de fixation d'accessoires
47 Tendeur de la chaine de distribution

PAGE 8
48 Silencieux du clapet de décharge de la pompe à air
49 Soupape décompression huile
50 Moteur de démarrage

DEUTSCH

PAGE 1
1 Wasserpumpe
2 Alternator
3 Öleinfüllstutzenverschluss
4 Drosselgestänge
5 Luftleitung (Abgasentgiftung)
6 Einlasskrümmer
7 "Zenith" – Vergaser
8 Stützplatte für Öldruckgeber
9 Hitzeschutz
10 Heissluftzufuhr zum Luftfilter
11 Pumpe für Servolenkung

PAGE 2
12 Zylinderkopf
13 Zylinderkopfdichtung
14 Wasserpumpenflügelrad
15 Auspuffkrümmer

PAGE 3
16 Duplex-Kette
17 Verdichter für Klimaanlage
18 Zündverstärker
19 Brennkammer im Kolben
20 Eine obenliegende Nockenwelle pro Zylinderreihe
21 Hohlstössel
22 Auspuffventil
23 Einlassventil
24 Hauptölkanalstopfen
25 Kombinierter Keilriementrieb Kurbelwellendämpfer
26 Ölpumpendeckel

PAGE 4
27 Nasse Zylinderlaufbuchse
28 Ölzufuhr zur Nockenwelle
29 Ölpumpe
30 Steuerkettenrad
31 Verlängerung für Ölmesstabrohr

PAGE 5
32 Stösselblock
33 Rohrleitung für Lufteinspritzung (Abgasentgiftung)
34 Kurbelgehäuse mit Flachkopf
35 Ölkühlerauslass
36 Hilfswelle

PAGE 6
37 Hintere Simmerringnut
38 Stütz für Drosselgestänge
39 Verteiler
40 Ventilfedern

PAGE 7
41 Luftpumpe (Abgasentgiftung)
42 Saugkammer
43 Ölsaugleitung mit Filtersieb
44 Motorölkühler
45 Ölfilter
46 Stütze für Hilfsgeräte
47 Steuerkettenspanneinrichtung

PAGE 8
48 Dämpfer am Luftpumpen-Druckreduzierventil
49 Öldruckauslöseventil
50 Antriebsmaschine

ITALIANO

PAGINA 1
1 Corpo Pompa Acqua
2 Alternatore
3 Tappo Rifornimento Olio
4 Articolazione Acceleratore
5 Tubazione Alimentazione Aria (Emissione scappamento)
6 Collettore di Aspirazione
7 Carburatore Zenith
8 Piastra Sostegno Trasmettitore Pressione d'Olio
9 Schermo Termico
10 Alimentazione Aria Calda al Filtro Aria
11 Pompa Servosterzo

PAGINA 2
12 Testata Cilindro
13 Guarnizione della Testata
14 Girante Pompa Acqua
15 Collettore Scarico

PAGINA 3
16 Catena Duplex
17 Compressore per Climatizzatore
18 Amplificatore Accensione
19 Cavità Camera Combustione ricavata nel Pistone
20 Albero Camme Semplice in Testa per Ciascuna Linea
21 Punteria a Impronta Invertita
22 Valvola di Scarico
23 Valvola di Aspirazione
24 Tappi Condotti Olio
25 Accoppiamento cinghia di trasmissione ammortizzatore albero a gomito
26 Coperchio pompa dell'olio

PAGINA 4
27 Camicia Umida per Cilindro
28 Alimentazione Olio Albero Camme
29 Pompa Olio
30 Ingranaggio Catena Comando Distribuzione
31 Prolunga Tubolare Astina Livello

PAGINA 5
32 Blocco Punteria
33 Tubazione Iniezione Aria (Emissione scappamento)
34 Monoblocco a Testa Piatta
35 Uscita Radiatore Olio
36 Albero Ausiliario

PAGINA 6
37 Scanalatura Posteriore Paraolio
38 Sostegno Articolazione Acceleratore
39 Distributore
40 Molle per Valvola

PAGINA 7
41 Pompa Aria (Emissione scappamento)
42 Camera Aspirazione
43 Prelevatore Olio con Reticella Filtrante
44 Radiatore Olio Motore
45 Filtro Olio
46 Staffa Sostegno Accessori
47 Tenditore per Catena Comando Distribuzione

PAGINA 8
48 Silenziatore Valvola di Sicurezza Pompa Aria
49 Valvola di decompressione dell'olio
50 Motore d'avviamento

The introduction of a completely new engine from a major manufacturer is, inevitably, a comparatively rare event and, therefore, assumes a significance as great as—if not greater than—that surrounding even a new car. When that engine comes from an organisation such as Jaguar, with an international reputation for advanced automotive design engineering in the high performance field, then the introduction assumes an even greater significance for the world automobile industry.

JAGUAR

JAGUAR CARS LIMITED · COVENTRY · ENGLAND

The issue of this catalogue does not constitute an offer. Jaguar Cars Limited reserve the right to amend specifications at any time without notice. Specifications and equipment vary for different countries to meet national legislation. Illustrations in this catalogue do not necessarily indicate standard equipment for a particular market. The colours printed in this catalogue may differ from actual colours. Your local Jaguar distributor or dealer will be pleased to advise you of equipment and specifications available.

Designed by Transart Studios, Printed in England by Transart Limited.

V12

INTRODUCTION

The new Jaguar V12 upholds the tradition established by the range of 'XK' 6 cylinder engines, of which over a quarter of a million have been produced, and which has formed the basic power unit for all Jaguar cars from the five Le Mans 24 Hour Race-winning competition models to the most luxurious saloon in the range. Yet a sophisticated approach to its design, coupled to precision manufacturing and assembly techniques, are the only inheritance which the V12 has received from its illustrious predecessors. The rest is all new.

The V12 engine was originally conceived as the cornerstone of Jaguar's plan to re-enter motor racing with as certain a chance of winning outright as was possible in so uncertain a sport. The product of Jaguar's famous engine design team of W. M. Heynes and C. W. L. Bailey, Vice-Chairman (Engineering) and Chief Designer respectively until their retirements in 1970, the engine featured a capacity of 5.0 litres, twin overhead cams per bank, petrol injection, transistorised ignition, and, even after only a very limited amount of development, was producing well over 500 B.H.P. when the decision was taken not to proceed further with the racing project. By then, two other names, equally well known in the international automotive engine design field, had joined Jaguar—W. T. F. Hassan and H. Mundy—the architects of Coventry Climax's spectacular entry in grand prix racing and whose engines powered the cars which gave Britain 4 World Driver and Manufacturers' Championships in the short space of nine years.

To this team of Hassan, Bailey and Mundy, under the leadership of Mr. Heynes, fell the task of producing a new version, no less advanced or sophisticated than the racing engine, but one capable of endowing Jaguar sports and saloon cars alike with a performance even more reliable and even less obtrusive than ever before.

This brochure relates, in broad outline, the genesis of this exciting project—the new Jaguar V12.

INTRODUCTION

INTRODUCTION
VORWORT
INTRODUZIONE

DESCRIPTION

DESCRIPTION
BESCHREIBUNG
DESCRIZIONE

RESEARCH & DESIGN

RECHERCHES ET CONSTRUCTION
FORSCHUNG UND ENTWURF
RICERCA E DISEGNARE

SPECIFICATION

SPECIFICATIONS
SPEZIFIKATION
CARATTERISTICHE

PRODUCTION

PRODUCTION
FERTIGUNG
PRODUZIONE

GENERAL DESCRIPTION

The engineering brief for the new engine called for a design offering a greater degree of smoothness, silence and flexibility than the current engines, coupled to power and torque outputs which, in the V12 engine's basic form, were required to be at least as good as the highest figures achieved by the 6 cylinder XK unit. These, in their most advanced competition form, produced approximately 325 B.H.P. and the V12 engine, as presented, produces an output very close indeed to that figure. Thus, the best ever achieved by the previous engine has been made the starting point for the new (a situation identical to that which existed at the introduction of the XK engine when the highest figure was then 160 B.H.P.).

The new Jaguar engine is a 12 cylinder unit in which the cylinders are disposed in a 'V' formation, at an included angle of 60°, and a single overhead camshaft is fitted to each bank of cylinders. The face of each cylinder head is flat and the shallow depression in the piston crown, together with cylinder liners are free standing. Internal drillings are provided for the oil supply to the bearings and a special effort has been made to eliminate external oil pipes. Water circulation has been the subject of special attention to ensure a consistent thermal gradient through the block.

The three-plane crankshaft is a steel forging which is 'Tufftrided' for additional hardness and strength. It is statically and dynamically balanced to extremely fine limits and is carried on seven large-diameter steel backed lead

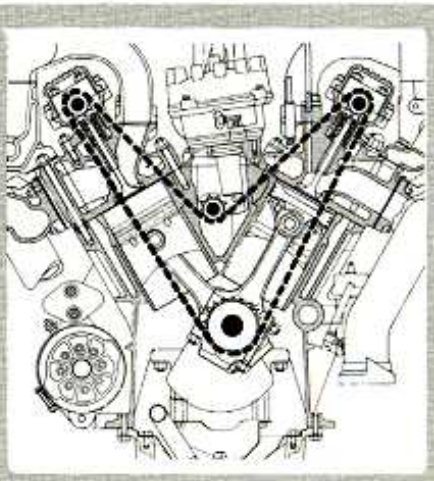

Section Illustration No. 3

Rotation of the camshafts is by a duplex chain running from a sprocket on the nose of the crankshaft. It is fully self-adjusting and particular efforts have been made to provide the simplest possible chain-run in the interests of minimum maintenance and noise. The chain also drives a jackshaft located in the middle of the 'Vee' and this drives the ignition distributor.

Q A

Question Answer

RESEARCH AND DESIGN – AN INTERVIEW WITH
W. T. F. HASSAN – DIRECTOR AND CHIEF ENGINEER POWER UNITS
H. MUNDY – EXECUTIVE DIRECTOR AND CHIEF DESIGNER (POWER UNITS)

1. An obvious question to start with. Why a V12?

Well, we could fill a book on this question alone. Firstly, from an engineering standpoint, a V12 is in perfect balance and this factor, together with the excellent torsional characteristics of the crankshaft, provide the ultimate in smooth running. This is of tremendous importance, particularly in saloon car applications. Secondly, a high power and torque output throughout the range coupled with extreme flexibility is best achieved by using as many cylinders as possible. Thirdly, as a general rule, an engine with a large number of small cylinders and a short stroke has a greater performance potential by reason of its ability to operate at high rotational speeds; therefore, a 12 is potentially better than an 8 of similar capacity. In this engine we have provided quite a substantial reserve for capacity increases should the need arise. Fourthly, it is relatively easy to derive a substantially smaller engine from the design. Perhaps I should stress that derivatives of the V12 are merely options open to us should the need arise. We have no applications in mind at the moment.

Finally, from a sales standpoint, there is the very important factor that V12 engines are currently obtainable only in exotic and extremely expensive cars such as Ferrari and Lamborghini. It is our intention to widen the availability of V12 engines and, by the use of the very latest machine tool equipment to achieve a volume of production which will enable Jaguar to offer this outstanding design at a very competitive price.

---

2. The engine is a completely new design – it bears no resemblance to the XK engine. Presumably, therefore, you did a lot of research work before deciding upon the final design?

the clearance between the head face and piston at top dead centre, form a combustion chamber which is relatively free of "squish". (This layout is termed the 'flat head' design by Jaguar engineers and this terminology is used throughout.)

A bore diameter of 90 mm. (3.54 ins.) and a stroke of 70 mm. (2.76 ins.) gives a capacity of 5343 c.c. (326 cu. ins.) which, with a compression ratio of 9 :1, gives a gross power output of 314 B.H.P. at 6200 R.P.M. (272 B.H.P. (DIN) at 5850 R.P.M.) and a gross torque figure of 349 lbs. ft. at 3800 R.P.M. (304 lbs. ft. (DIN) at 3600 R.P.M.). The gross B.M.E.P. is 161 p.s.i. at 3800 R.P.M. (141 p.s.i. (DIN) at 3600 R.P.M.).

Special attention has been paid to accessibility, and the main auxiliaries are either on the top of the unit or at the front. An interesting feature is the use of Lucas transistorised ignition of the type initially designed for Formula 1 racing engines. It requires no maintenance or adjustment and has proved extremely reliable in service. Extensive use has been made of light alloys and, as a result, the complete unit weighs only 680 lbs. with all ancillaries fitted except the gearbox. A major contribution to this low weight is the use of aluminium alloy for the cylinder block.

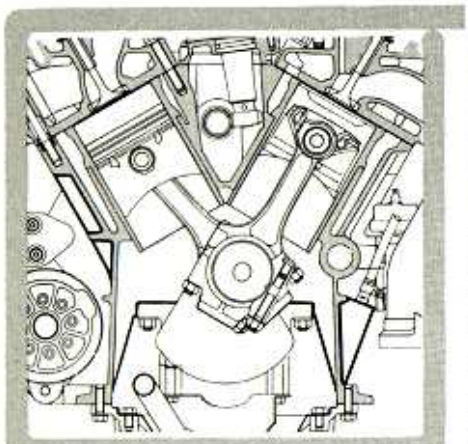

Section Illustration No. 1

As can be seen from the illustration, it is very heavily ribbed both internally and externally, and the lower face of the block is well below the crankshaft centre-line to provide the maximum support and rigidity for the seven main bearings as well as the transmission. It is of the open deck type—there being no top faces, and the wet-type indium bearings. Cast-iron main bearing caps, each located by four bolts, provide the greatest rigidity for the whole assembly. The design of the steel connecting rods was the subject of special study to eliminate sharp edges and radii. They are unusual in that the connecting rod bolts are located in their holes in the main part of the rod by a serrated shank, rather than by the more usual 'D' shaped head located against a 'flat' on the rod itself. This 'flat' has been shown to be a potential source of localised stress and was therefore discarded. The aluminium alloy pistons also contain the combustion chamber which consists of a shallow depression with a clearly defined periphery. They have two compression rings and one oil control ring. Fully floating gudgeon pins are employed and these are retained by circular-section wire circlips.

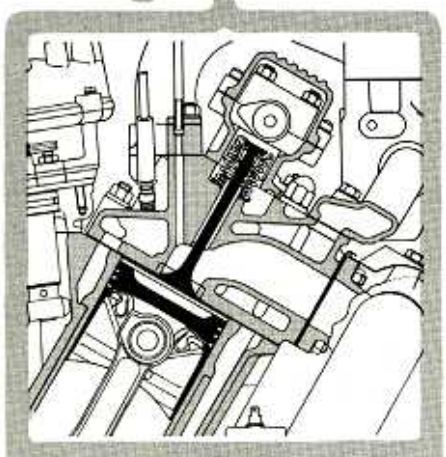

Section Illustration No. 2

The cylinder head is also in aluminium alloy. Since the combustion chamber forms part of the piston, the head face adjacent to the block is flat—a fact which greatly simplifies the casting and machining processes. In-line valves are used, the inlet valve being of 1.625 ins. diameter whilst the exhaust is of 1.375 ins. diameter. Twin valve springs and bucket type tappets are operated by the camshaft which is a chilled cast iron unit—the tappets and the camshaft running direct on the aluminium thus dispensing with the conventional tappet bushes and steel-backed bearings. The camshaft and attendant gear are mounted in a tappet block which is detachable from the head assembly. The whole unit—head and tappet block—can be removed and replaced without disturbing the valve timing.

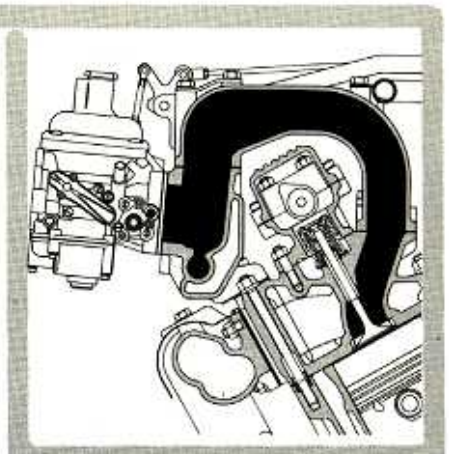

Section Illustration No. 4

The long inlet manifolds with their four Zenith carburettors provide a high gas flow at low-and medium-speeds to give the best possible torque in these vitally important parts of the speed range.

The lubrication system features a "crescent-type" oil pump which is driven by the crankshaft and is concentric with it. Oil passes from the strainer in the sump to the pump and from there to a large capacity filter located horizontally in front of the sump. The oil is then circulated through the engine—a by-pass valve diverts the surplus through an oil-to-water-type cooler, located immediately behind the filter, and then back to the pick-up side of the pump. This type of cooler provides a closer control of oil temperature than the more widely used oil-to-air unit and greatly assists the oil-warming process after a start from cold. All V12 engines for the North American market meet the U.S.A. Federal and Californian emission standards. The system adopted for this unit features air injection, using an air pump driven off the nose of the crankshaft by a belt, and air pipes located on top of the engine. The air injector nozzles are located on the manifold side of the exhaust valve—a perfect position, for it is important to inject the air into the exhaust gas at the point of highest temperature to give the best burning characteristics. These provisions are backed up by heat transfer shields and hot air intakes which greatly assist in reducing emissions during the critical cold-start period. A detailed study of the cutaway illustration will reveal many other interesting details of this outstanding new Jaguar engine.

DESCRIPTION

DESCRIPTION
BESCHREIBUNG
DESCRIZIONE

RESEARCH & DESIGN

RECHERCHES ET CONSTRUCTION
FORSCHUNG UND ENTWURT
RICERCA E DISEGNARE

SPECIFICATION

SPECIFICATIONS
SPEZIFIKATION
CARATTERISTICHE

revolution band at the peak of the curve. Such figures look impressive on paper but that's about all ! The V12 pulls like a steam engine all the way from 500 upwards and the performance is quite electrifying – if you will pardon the comparisons !

One of our design requirements was that the engine should be capable of running on the fuels generally available around the world. We started off using 10.6 :1 compression ratio and 100 octane fuel. We then reduced to 10 :1 and, in development work, found that the engine would perform entirely satisfactorily on 98 octane fuel ! However, the requirements of the exhaust emission standards have forced us to reduce the compression ratio to 9 :1 for current production but, as customer experience builds up, we hope to return to the higher ratios – legislation on emissions permitting !

---

5. That remark leads us naturally to the effects that the American anti-polution requirements have imposed on the engine ?

On the actual design itself – very little. You must remember that, when this design was evolved, we – and the industry – were only at the beginning of our investigations into exhaust emissions. We did think that the lower surface-area-to-volume-ratio which you achieve with a 'flat head' design would be an advantage and when we found that we could eliminate the squish areas around the outer periphery of the piston crown with benefits to the power output, we considered that this would help the exhaust emissions situation by eliminating these areas of trapped gas. Our development work proved these factors to be true and we also know now that what really matters is good distribution allied to good fuel atomisation.

So the main effects are the visible ones of air pump, air distribution pipes, etc., and the invisible ones of a modest ignition advance and conservative valve-timing. Although it was our intention to offer both carburetter and petrol injection on this engine, the time required to complete the work needed to achieve the very low emission levels has meant that we have had to concentrate on the carburetter version ; however, the basic design of the engine does contain the features necessary for the successful fitment of petrol injection equipment.

---

6. With belt drives very much to the fore, isn't your chain drive a little out-dated ?

We don't think so ! Belt drives have become very fashionable of late but on a V12 they do not match the advantage of a really good simple chain drive layout such as we have in our engine. You can use only one side of a belt to drive most of your components whereas with a chain you can use both. Therefore, with a belt drive, you would need at least two belts to drive even the minimum number of components and, since quite a wide belt is needed to withstand the loads reliably, this form of drive would have increased the overall length of the engine by quite an amount. It's long enough as it is ! In addition, we have a lot of experience of chain drive and this has enabled us to provide a drive which our testing has proved to be both silent and capable of high mileages without attention. There is, of course, fully automatic adjustment of tension and wear.

---

7. This is the first Jaguar engine to use aluminium at all extensively. Is Jaguar getting weight conscious ?

Yes, we did. A tremendous amount of research was undertaken, using single cylinder engines, to prove the relative merits of various designs which were fundamental to the project : Single overhead cams per bank as opposed to twin-cams ; various types of combustion chamber layouts together with valve sizes and sparking plug positions ; inlet and exhaust port shapes etc. The only area we did not delve into was the bore and stroke. This was established right at the beginning at 90 mm. bore and 70 mm. stroke in contrast to the 87 mm. bore used on the racing engine. We decided on the 90 mm. bore primarily to increase the torque at the bottom end and to provide for larger valves should they be required in the future.

We really learnt an awful lot from this work – it was most valuable.

---

3. With a long – and successful – tradition of twin overhead camshafts behind you, why have you chosen single cams per bank for the V12 ?

There are a number of very good reasons. Firstly, we decided that we wanted to use the 'flat head' type of layout because it produced superior torque in the lower and middle speed ranges, and the decision to use single cams per bank was a natural design progression. Secondly, we placed a very high priority on ease of servicing, and low engine noise level ; the single cam layout enables us to use a single chain drive with a simple layout, whereas a satisfactory chain drive for twin cams per bank becomes very complex indeed. Thirdly, we intend to produce this engine in quantity and at a competitive price so cost of manufacture was an important consideration. In this context the single cam 'flat head' design offers some major opportunities in the cost-saving area and we have tried to take full advantage of them. The unit cost of the engine as produced is considerably below that which we considered possible with the 4 cam design. Fourthly, the use of single cams per bank simplified the task of locating all the ancillaries under the low bonnet line which is such a feature of Jaguar styling. In particular, alternator and air conditioning compressor – both of which take up a lot of room – presented major headaches : in fact, we doubt whether we could have got them into the space available with a 4 cam engine.

---

4. What made you decide to adopt the 'flat head' type of layout for a high performance engine ?

During the course of our single cylinder work, we considered both a 'wedge-type' head and a 'flat head' layout. We did not actually build the wedge-type head because, from the extensive amount of work carried out by Coventry Climax during their racing days, we had a pretty extensive knowledge of this layout and what could be achieved with it. Most of the effort went into the flat head configuration which we finally adopted : we decided to investigate the whole design, beginning with the fundamental principles – and, as a result, a very considerable amount has been learnt – and put into practice – about many of the lesser known aspects of this layout.

One of the chief advantages of the design, as we have interpreted it, is the extreme simplicity of the cylinder head casting and machining operations. At present, we are using sand castings – eventually we intend to use all-metal pattern equipment – and we have gone to a lot of trouble to design for a one-piece jacket core to avoid any possibility of misplacement. In addition, we have decided to use a detachable tappet block which again is a simple unit to cast – we use pressure-die-casting – and to machine with extreme accuracy.

More important is the fact that using this configuration, we got extremely good specific power and torque outputs in the lower and middle speed ranges up to 4500 R. P. M. and this we regarded as being of paramount importance. In modern traffic conditions a good spread of power and torque is worth far more than any amount of power over a narrow